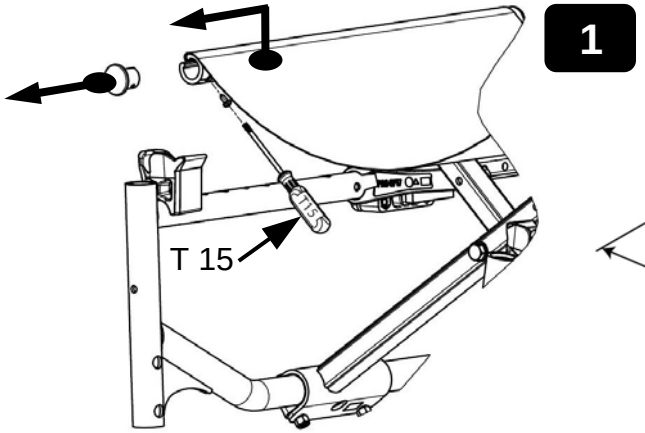
1
T 15

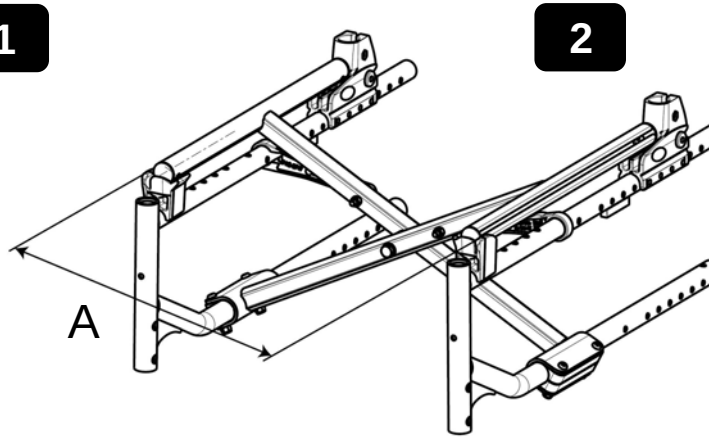
2
A

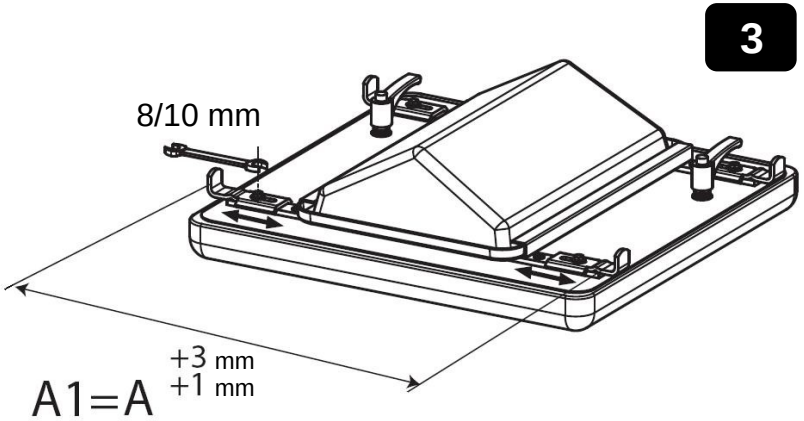
3
8/10 mm
A1=A +3 mm +1 mm

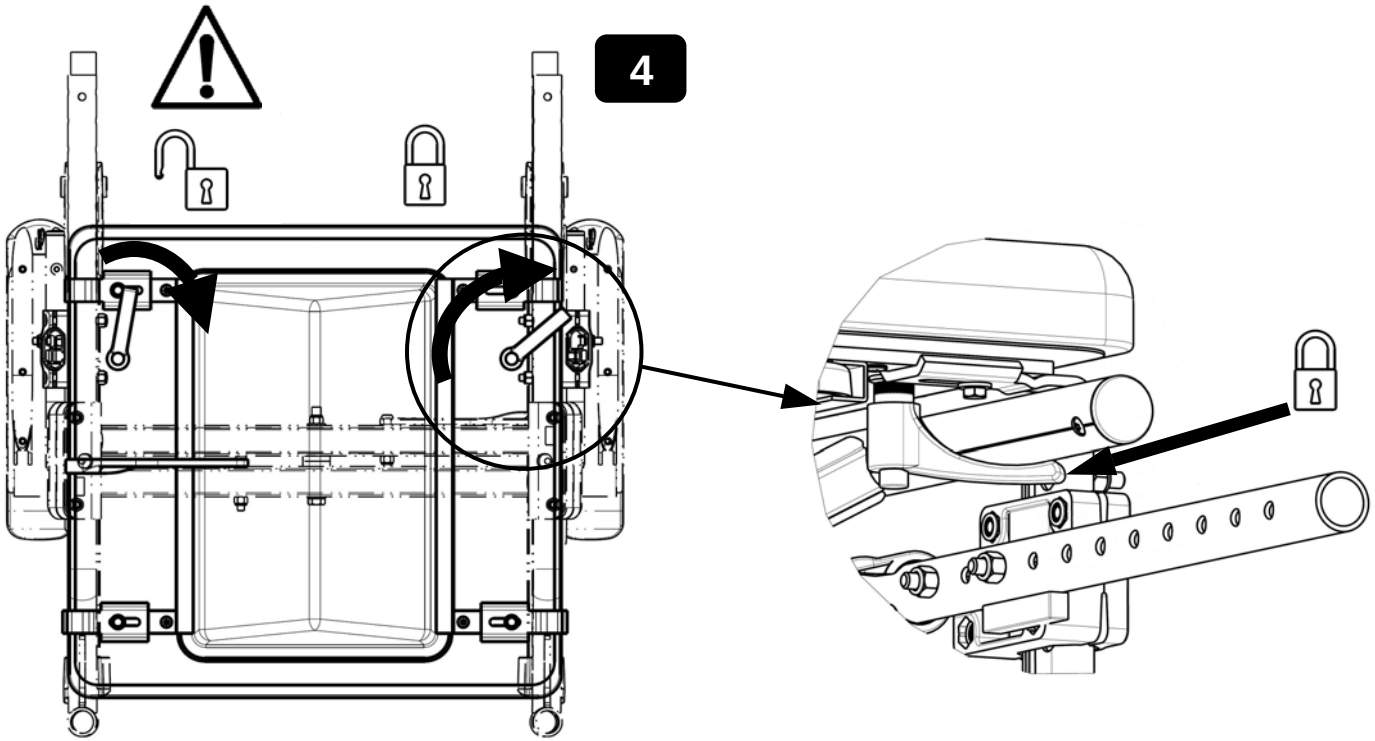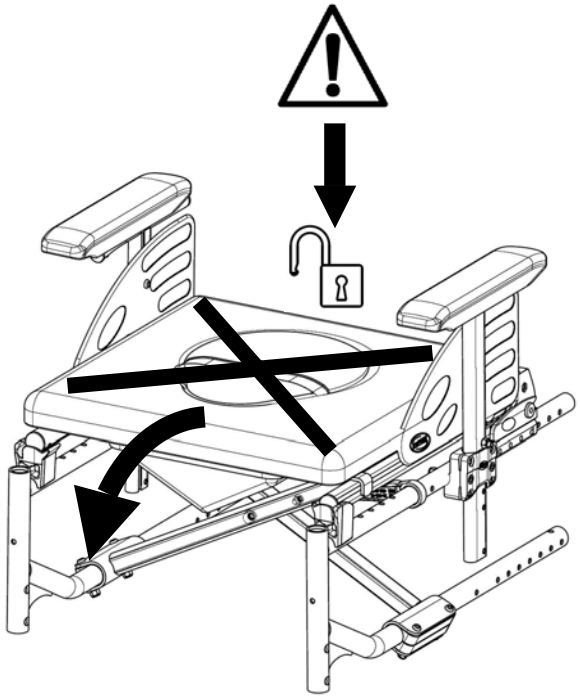
4